5 Video and Graphics

5.1 Display Engine (DE)

The Display Engine (DE) is a hardware composer to transfer image layers from a local bus or a video buffer to the LCD interface. The DE supports four overlay windows to blend, and supports image post-processing in the video channel. The block diagram of DE is shown in Figure 5-1.

The DE has the following features:

- Output size up to 4096 x 2048
- Supports seven alpha blending channels for main display and two display outputs
- Supports four overlay layers in each channel, and has an independent scaler
- Supports potter-duff compatible blending operation
- Supports AFBC buffer decoder
- Supports vertical keystone correction
- Input format
  - Semi-planar of YUV422/YUV420/YUV411/P010/P210
  - Planar of YUV422/YUV420/ YUV411
  - ARGB8888/XRGB8888/RGB888/ARGB4444/ ARGB1555/RGB565
- Output format: 8-bit or 10-bit YUV444/YUV422/YUV420/RGB444
- Frame Packing/Top-and-Bottom/Side-by-Side Full/Side-by-Side Half 3D format data
- 10-bit processing path for HDR video
- AWonder1.0 for excellent display experience
  - Adaptive de-noising for compression noise or mosquito noise with yuv420/422 input
  - Adaptive super resolution scaler
  - Adaptive local dynamic contrast enhancement
  - Adaptive detail/edge enhancement
  - Adaptive color enhancement (blue-stretch, green-stretch, and fresh tone correction) and
  - Skin tone protection
  - Hue gain, saturation gain, and value gain controller
  - Fully programmable color matrix
  - Dynamic gamma
- Supports write back for high efficient dual display and miracast

- Supports register configuration queue for register update function

Figure 5-1 DE Block Diagram

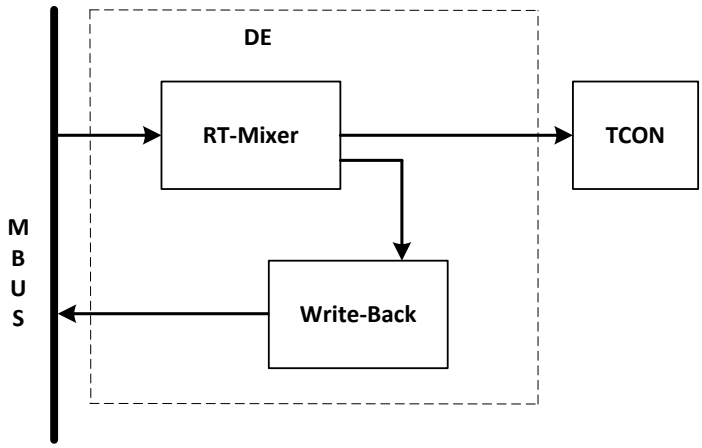

5.2 De-interlacer (DI)

The De-interlacer (DI) converts the interlaced input video frame to progressive video frame.

The DI has the following features:

- Only off-line processing mode
- Video resolution from 32x32 to 2048x1280 pixel
- Input data format: 8-bit NV12/NV21/YV12 and planar YUV422/planar YUV422 UV-combined
- Output data format
  - 8-bit NV12/NV21/YV12 and planar YUV422/planar YUV422 UV-combined for DIT
  - YV12/planar YUV422 for TNR
- Weave/pixel-motion-adaptive de-interlace method
- Temporal noise reduction
- Film mode detection with video-on-film detection
- Performance
  - Module clock 120MHz for 1080P@60Hz YUV420 with all functions enable
  - Module clock 150MHz for 1080P@60Hz YUV422 with all functions enable

5.3 Graphic 2D (G2D)

The Graphic 2D (G2D) engine is hardware accelerator for 2D graphic.

The G2D has the following features:

- layer size up to 2560x2560 pixels
- Input format and output format contain the following:
  - YUV422 (semi-planar and planar format)
  - YUV420 (semi-planar and planar format)
  - P010, P210, P410, and Y8
  - ARGB8888, XRGB8888, RGB888, ARGB4444, ARGB1555, ARGB2101010, and RGB565
- Multiple rotation types
  - Horizontal flip and vertical flip
  - 0, 90, 180, or 270 degrees' rotation in clockwise direction

5.4 Video Engine

5.4.1 Video Decoding

The Video Decoding consists of Video Control Firmware(VCF) running on ARM processor and embedded hardware Video Engine(VE). VCF gets the bitstream from topper software, parses bitstream, invokes the Video Engine, and generates the decoding image sequence. The decoder image sequence is transmitted by the video output controller to the display device under the control of the topper software.

The Video Decoding has the following features:

- Supports ITU-T H.265 Main/Main10, level 6.1
  - Maximum video resolution:8192x4320
  - Maximum decoding rate: 3840mx2160@60fps
- Supports VP9 Profile0/ Profile2, level 6.1
  - Maximum video resolution: 8192 x 4320
  - Maximum decoding rate: 3840mx2160@60fps
- Supports ITU-T H.264 Base/Main/High Profile@Level 4.2
  - Maximum video resolution: 3840 x 2160
  - Maximum decoding rate: 3840x2160@30fps
- Supports ITU-T H.263 Base Profile
  - Maximum video resolution: 1920 x 1080
  - Maximum decoding rate: 1920x1080@60fps
- Supports VP8
  - Maximum video resolution: 1920 x 1080
  - Maximum decoding rate: 1920x1080@60fps
- Supports MPEG4 Simple/ Advanced Simple Profile@Level 5
  - Maximum video resolution: 1920 x 1080
  - Maximum decoding rate: 1920x1080@60fps
- Supports MPEG2 Main Profile, High Level
  - Maximum video resolution: 1920 x 1080
  - Maximum decoding rate: 1920x1080@60fps
- Supports MPEG1 Main Profile, High Level
  - Maximum video resolution: 1920 x 1080
  - Maximum decoding rate: 1920x1080@60fps

- Supports XVID
  - Maximum video resolution: 1920 x 1080
  - Maximum decoding rate: 1920x1080@60fps
- Supports Sorenson Spark
  - Maximum video resolution: 1920 x 1080
  - Maximum decoding rate: 1920x1080@60fps
- Supports AVS/AVS+ Jizhun Profile
  - Maximum video resolution: 1920 x 1080
  - Maximum decoding rate: 1920x1080@60fps
- Supports JPEG JFIF file format, Not Support Non-interleaved Scan
  - Maximum video resolution: 16384 x 16384
  - Maximum decoding rate: 1920x1080@60fps

5.4.2 Video Encoding

The Video Encoding consists of the video encoding unit(VE) and JPEG encoder(JPEG). The VE supports H.264 encoding, and JPEG supports JPEG/MJPEG encoding.

5.4.2.1 VE

The VE is a CODEC that supports H.264 protocol based on ASIC. It is custom-made for the IPC usage and features high compressing rate, low CPU usage, short delay and low power consumption.

The VE has the following features:

- Supports ITU-T H.264 High profile/Main profile/Baseline profile @Level 4.2 encoding
- Supports 16x16, 8x8 and 4x4 block sizes
- Search Range [H:+/-128, V: +/-24]
- Suports frame level and MB level rate control and supports three bit rate control modes: Constant Bit Rate (CBR), Variable Bit Rate (VBR), and FIXEDQP
- Motion compensation with 1/2 or 1/4 pixel precision
- Transform 4x4 and transform 8x8
- CABAC and CAVLC entropy encoding
- In-loop deblocking filter
- Multi-slice encoding
- Supports normal functions: intra-refresh, inter-only-in-P-frame
- Supports special functions: dynamic search window range

- Supports region of interest(ROI) encoding with custom QP map
- Supports OSD front-end overlaying

5.4.2.2 JPEG

The JPEG is a high-performance JPEG encoder based on ASIC. It supports 64-megapixel snapshot or HD MJPEG encoding.

The JPEG has the following features:

- ISO/IEC 10918-1 (CCITT T.81) baseline process (DCT sequential) encoding
- Supports multiple input picture formats:
  - Semi-planar YCbCr4:2:0
  - YCbCr4:2:2
  - YCbCr4:4:4
- Supports configurable quantization tables for the Y component, Cb component and Cr component respectively
- Supports OSD front-end overlaying
- Supports the color-to-gray function